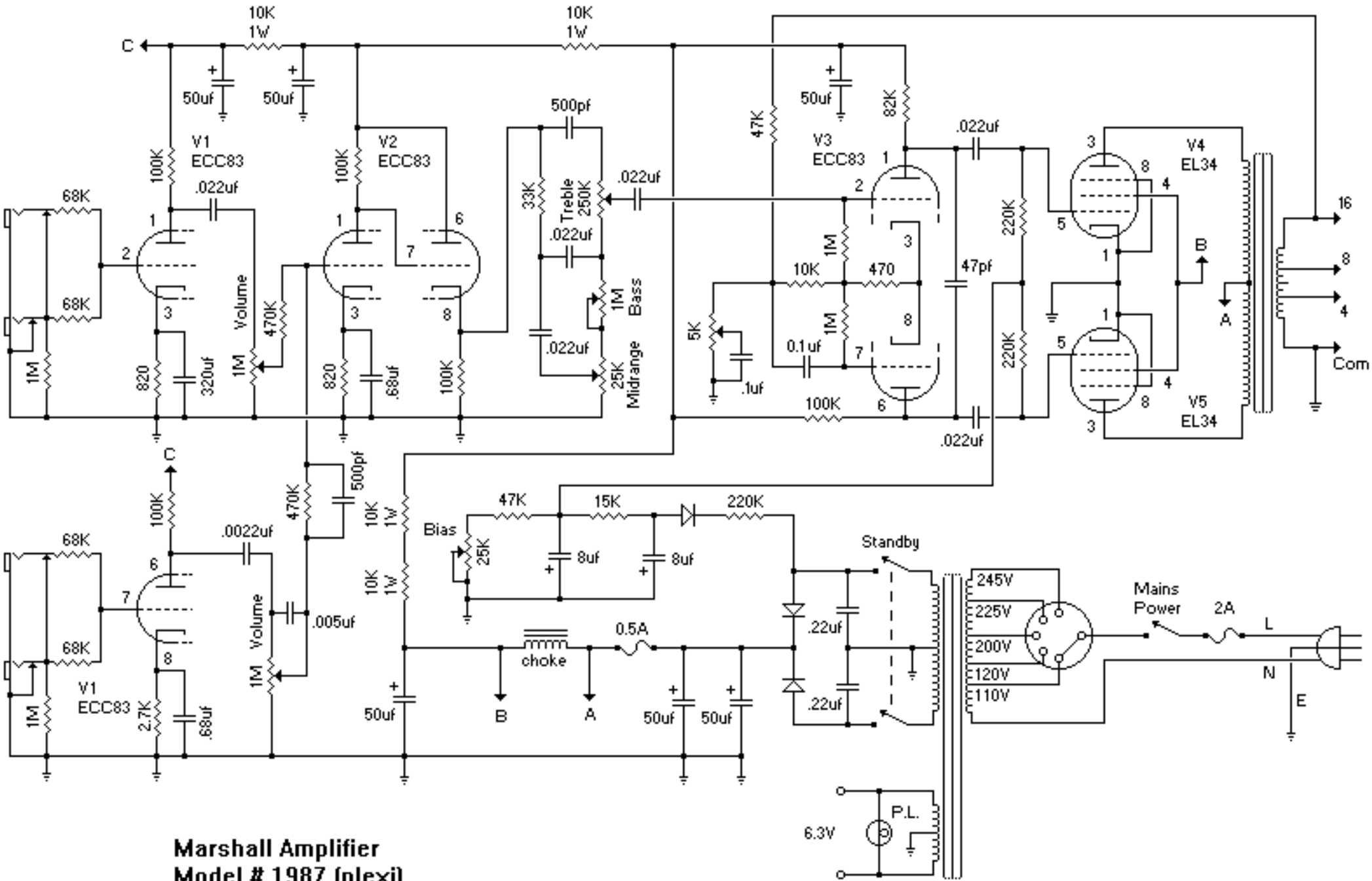


**Marshall Amplifier**
**Model # 1987 (plexi)**
**Drawn By: Joe Piazza**
**1 / 15 / 97**